The present work, produced by the ECOSIGN Consortium, is licensed under a Creative Commons Attribution-NonCommercial-NoDerivatives 4.0 International License.

# Basic Concepts on Ecodesign

## Unit 13 Final Course Review

Carmen Fernández Fernández. c.fernandez@cetem.es

13.1 Unit 1 INTRODUCTION TO ECODESIGN ..... 2
13.1.1 General Concepts on Ecodesign ..... 2
13.1.2 Benefits of Ecodesign ..... 2
13.1.3 Ecodesign Barriers ..... 3
13.2 Unit 2 TRADITIONAL DESIGN VERSUS ECODESIGN ..... 3
13.3 Unit 3 EUROPEAN LEGAL FRAMEWORK OF ENVIRONMENT AND ECODESIGN ..... 4
13.3.1 European Environmental Policy ..... 4
13.3.2 Legal Framework of Ecodesign ..... 6
13.4 Unit 4 LIFE CYCLE ASSESSMENT AND COSTS ..... 7
13.5 Unit 5 PRINCIPLES/STRATEGIES OF ECODESIGN ..... 11
13.6 Unit 6 ENVIRONMENTAL ASPECTS OF AN ORGANISATION ..... 13
13.7 Unit 7 IMPLEMENTATION OF ECODESIGN ..... 14
13.8 Unit 8 ENVIRONMENTAL MANAGEMENT SYSTEM ..... 16
13.9 Unit 9 ECOSIGN IN THE ENVIRONMENTAL MANAGEMENT ..... 19
13.10 Unit 10 INTRODUCTION TO ECOLABELLING. COMMUNICATION . 22
13.10.1 Types of Ecolabel ..... 22
13.10.2 Difference between Ecolabels and Product Ecodesign ..... 24
13.11 Unit 11 EPD COMMUNICATION ..... 24
13.11.1 What is an Environmental Product Declaration? ..... 24
13.11.2 Development and Verification of an EPD ..... 25
13.11.3 Product Category Rules (PCR) ..... 26

On completion of this unit, a learner will:

–Know overall the concepts of Ecodesign already learned.

Funded by the Erasmus+ Programme of the European Union

Ecoinnovation Skills for European Designers, Project number: 562573-EPP-1-2015-1-SI-EPPKA2-SSA. Disclaimer: The European Commission support for the production of this publication does not constitute endorsement of the contents which reflects the views only of the authors, and the Commission cannot be held responsible for any use which may be made of the information contained therein.

## 13.1 Unit 1 INTRODUCTION TO ECODESIGN

### 13.1.1 General Concepts on Ecodesign

Companies need to demonstrate their respect and commitment to the environment and natural resources, strengthening their whole product life cycle with actions that demonstrate such commitment. Regarding these kind of activities, the most outstanding action is ECODESIGN, which has become the main methodology that can be used by companies to make their products more sustainable and eco-friendly.

We can define Ecodesign as a "SYSTEMATIC INCORPORATION OF ENVIRONMENTAL ASPECTS[1] INTO PRODUCT DESIGN, WITH THE AIM TO REDUCE ITS IMPACT[2] THROUGH ITS ENTIRE LIFE CYCLE[3]".

Ecodesign claims the need of incorporating environmental and sustainability criteria into the basic requirements of product design, such as costs, function, utility, aesthetics, reliability, safety, etc. These environmental criteria range from the struggle to minimize all consumptions and resources to the reduction of emissions and pollutants throughout the product life cycle, not only during its manufacturing process, but until the end of its useful life.

*Under this perspective, Ecodesign takes into account: raw materials, development and manufacturing, packaging, distribution, sale, use, maintenance required, reuse (if applicable), and disposal.*

To perform a life cycle analysis of a product, the PRODUCT SYSTEM[4] and the FUNCTIONAL UNIT[5] must be defined.

### 13.1.2 Benefits of Ecodesign

When Ecodesign is applied and implemented in the company, the manufactured products show to be more respectful and to have a greater environmental awareness, while they are still fulfilling the function for which they have been created and, especially, without the need to have higher prices. Which means that companies should know that implementing Ecodesign in their product development process will help to

[1] LIFE CYCLE: "Set of consecutive and interrelated stages of a product system, from the purchase of raw materials, or its generation from natural resources, to their final disposal".
[2] ENVIRONMENTAL ASPECT: "Element of the activities, products or services from an organization that can interact with the environment".
[3] ENVIRONMENTAL IMPACT: "Any change in the environment, whether good or bad, as a result (totally or partially) of environmental aspect".
[4] PRODUCTS SYSTEM: "Set of unitary processes with elementary flows and product flows, which performs one or more defined functions, and serves as a model for the product life cycle".
[5] FUNCTIONAL UNIT: "Quantified performance of a product system for use as referent unit".

increase their competitiveness and to differentiate themselves from the competition through a "green image" which has more and more social impact.

***MAIN BENEFITS OF ECODESIGN:***

- ENVIRONMENTAL BENEFITS: Lower impact of the developed products and to a bigger and better fulfilment of the environmental legislation.
- ECONOMIC BENEFITS Motivated by the “optimisation of the resources” (raw materials and energy consumption, etc.) and the “own production factors” to generate a lower environmental impact, and the “reducing the impact of transport”, lower fuel consumption → lower emissions.
- SOCIAL BENEFITS: Better image of the company, for its response to the needs of a society with a growing ecological sensitivity. "Eco publicity" and "green publicity", which captures the attention of society, marking a clear differentiation with the rest of the competitors.

### 13.1.3 Ecodesign Barriers

There are some possible difficulties that may arise during decision making and during implementation. These kinds of difficulties can be solved through the participation of experts and changes in mentality towards a more innovative character.

***MAIN BARRIERS OF ECODESIGN:***

- Lack of experts in environmental issues. Ignorance of environmental aspects.
- Understanding the hiring of experts as a cost.
- Difficulty of Access the necessary environmental information and the cost involved.
- Low innovative character, which makes it difficult to implement such actions until there is no legislative requirement or by market demands.

## 13.2 Unit 2 TRADITIONAL DESIGN VERSUS ECODESIGN

We understand Ecodesign as a design philosophy that claims the need to incorporate environmental criteria into the basic design requirements of a product, such as costs, utility, aesthetics, reliability, safety, etc.

Obviously, environmental requirements advocate consumption optimisation, emissions, and all possible contamination during the life cycle of the product.

At this point, it should be clarified that Ecodesign does not address a substantial change in the traditional stages of the process of product design and development, but to provide a new point of view, considering aspects of sustainability as part of the key requirements.

Basically, the differences between the traditional design process and Ecodesign are presented in the following figure:

The environmental criteria indicated in the Ecodesign in each of the stages are added to the traditional design and development.

## 13.3 Unit 3 EUROPEAN LEGAL FRAMEWORK OF ENVIRONMENT AND ECODESIGN

### 13.3.1 European Environmental Policy.

*Evolution of the community environmental Policy:*

- In the 1970s and 1980s, priority was given to issues of traditional ecology such as the protection of species, the improvement of air and water quality by reducing pollutant emissions.
- Currently, it is prioritised that the approach be more systematic and take into account other links between different topics and their global dimension. It involves moving from rehabilitation to prevention of environmental degradation.

The general principles of the European environmental policy are:

- **Precautionary principle:** In case there are clear evidences of a new environmental problem, without full scientific confirmation of it, precautionary measures will be applied.
- **Prevention principle:** Try to avoid any form of pollution or deterioration of the environment, instead of repairing the effects it produces when the damage cannot be avoided.
- **Rectifying pollution at source principle:** Immediate implementation of the timely resolution to neutralize as much as possible the effects of the attacks produced and to avoid the progression of the same ones.
- **"Polluter-pays" principle:** Oriented to the development of the regulation that establishes the responsibilities before actions, identification of the offender which the damage to the environment is attributable and the infractions of those damages that have to be repaired.

The basic legal framework of the European Environmental Policy is composed of multiannual environmental action programs set up the framework for future actions in all areas of environmental policy. They are integrated in horizontal strategies and are taken into consideration in international negotiations on environmental issue. In addition, its application is critical.

***Summary of the Legal Framework of European Environmental Policy:***

- ACTION PROGRAMMES: They lay down future legislative proposals and objectives for the Union's environmental policy over a period of several years. The specific measures are adopted after. The programs are the background on the legislative measures which will be adopted and the first-rate interpretative frame.

- HORIZONTAL STRATEGIES: They are joining forces to promote environmental improvements alongside other aspects such as: promoting growth and employment with an environmental dimension, quality of life promoting prosperity, environmental protection and social cohesion, etc.

- ENVIRONMENTAL IMPACT ASSESMENT AND PUBLIC PARTICIPATION: Assessment of activities projects with great impact on the environment.

- INTERNATIONAL COOPERATION: The European Union take part of global, regional, supra-regional, "Agreements" on a wide range of issues (Nature and biodiversity, Climate Change, Transboundary air and water pollution).

- IMPLEMENTATION, COMPLIANCE AND MONITORING OF THE LEGISLATION: Legislation such as: Directives, Regulations and Decisions, both at level of the state of the environment, and compliance with these legal requirements.

## 13.3.2 Legal Framework of Ecodesign

The European Union began to develop regulation and legislation in product Eco-design in the 1990s. Eco-design is of vital importance in European environmental policies, as is demonstrated by the European strategy for "Sustainable Development" of 2009, which established the Sustainable Consumption and Production as one of the priority areas of action.

***Summary of the Basic Legal Framework for Ecodesign in Europe:***

- Integrated product policy
- Action plans: Effective use of resources, ecoinnovation, sustainable consumption and production, and circular economy.
- Waste management and prevention.
- Ecological and energy labelling.
- Eco management and audit scheme (EMAS).
- Ecological design.
- Green Public Procurement.
- Environmental Product Declarations, EPD.
- Other voluntary instruments (standards).

The following chart summarises the general Eco-design standards of the ISO 14000 family of standards.

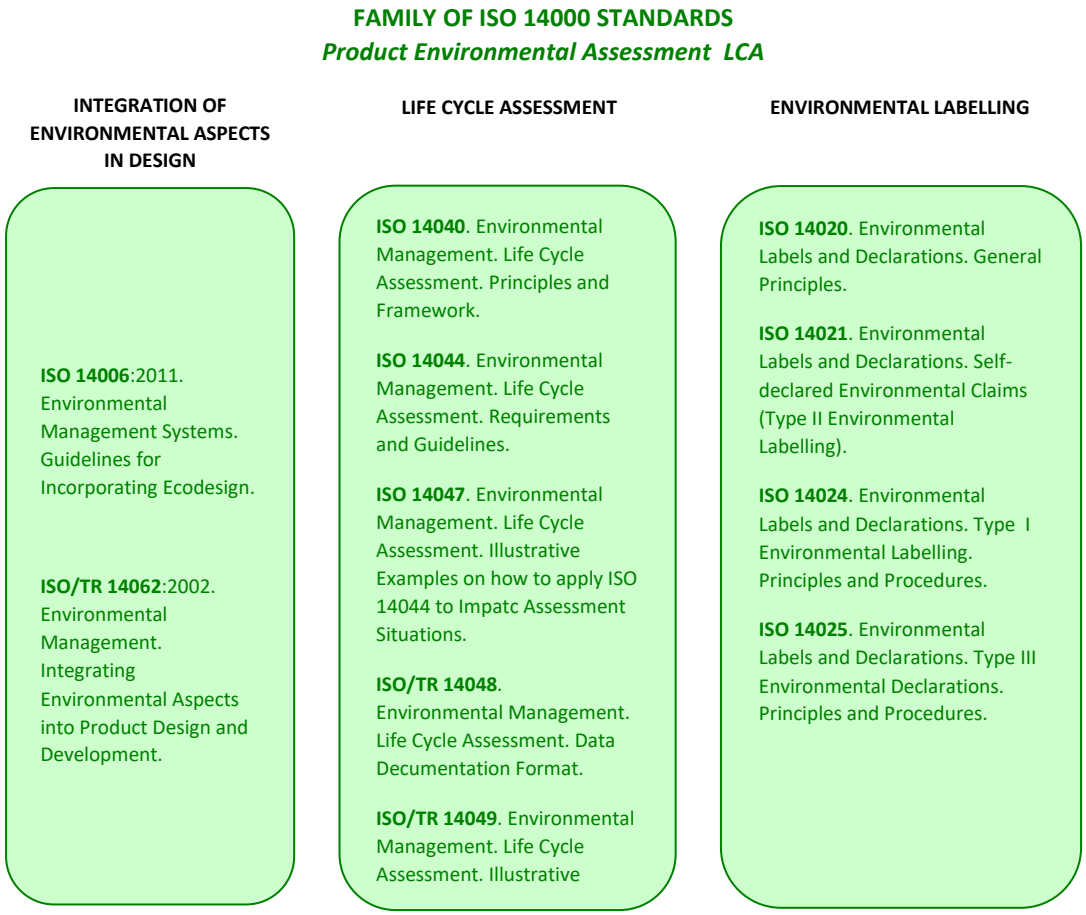


## 13.4 Unit 4 LIFE CYCLE ASSESSMENT AND COSTS

Life Cycle Assessment (LCA) is one of the most used methodologies to improve the environmental behaviour of products, processes and activities.

According to the standard ISO 14040[6], "Life Cycle Assessment" are defined as:

- "Life Cycle Assessment": A technique to determine the potential environmental aspects and impacts associated to a product, service or process, with a compilation of the system inputs and outputs; the assessment of the potential environmental impacts associated to those inputs and outputs; and the interpretation of the results from the inventory and impact stages related to the objects of study.

[6] ISO 14040:2006. Environmental Management. Life Cycle Assessment. Principles and Framework.

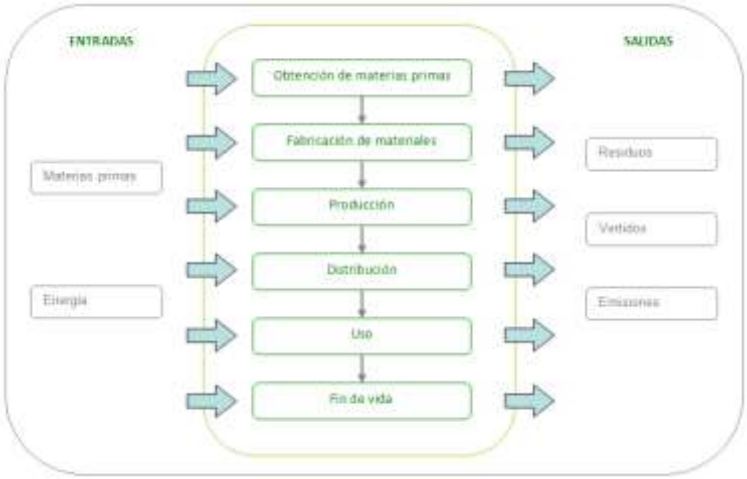


*Life Cycle Stages*

*LCA includes the entire product's life cycle, process or activity, taking into account the extraction and processing of raw materials, production, transport and distribution, use, reuse and maintenance, recycling and final disposal stages.*

When the LCA is developed according to the standards ISO 14040[1] and ISO 14044[7], the LCA is generally focused on the consumption of resources and the environmental impacts generated.

*The LCA is the base for sustainable consumption and production, the technical support of:*

- Ecodesign.
- Carbon footprints (GHG emissions), hydro, environmental, etc.
- Eco-labelling type I (Ecolabel, etc.) y type III (Environmental Product Declaration - EPD).
- GPP: Green Public Procurement.

LCA main stages are four:

- STAGE 1: GOAL AND SCOPE DEFINITION
- STAGE 2: INVENTORY ANALYSIS
- STAGE 3: IMPACT ASSESSMENT
- STAGE 4: INTERPRETATION

When the cost analysis is required, an additional stage is added:

[7] ISO 14044:2006. Environmental Management. Life Cycle Assessment. Requirements and Guidelines.

- STAGE 5: LIFE CYCLE COSTING ANALYSIS

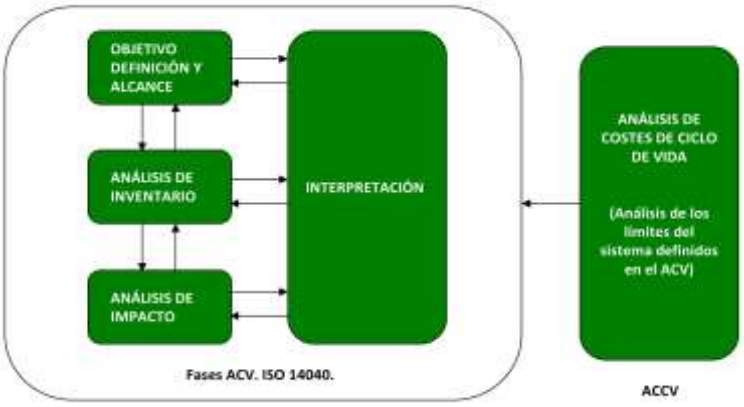


*Life Cycle Assessment Stages*

*LCA may be applied to a product, process or activity.*

***Life Cycle Assessment Stages (LCA):***

- STAGE 1: GOAL AND SCOPE DEFINITION: At this stage the following are defined: aim of the study, reason for undertaking the study, target audience and the description of the chosen system -functional unit, system boundaries, data quality requirements, stated hypothesis, assessment methods, selecting impact categories, etc.

  Two basic concepts for understanding LCA are: "functional unit" and "system boundary".

  - "Functional unit": is the reference unit to measure the performance of the product inputs and outputs. Its function must be identified and quantified in order to compare different products or systems

  - The "system boundaries": determine which unitary processes must be included in the LCA. Those processes will be determined considering factors such as: assessment application, stated hypothesis, exclusions, required quality data, economical limitations, etc. The possible "system boundaries" of a LCA are:

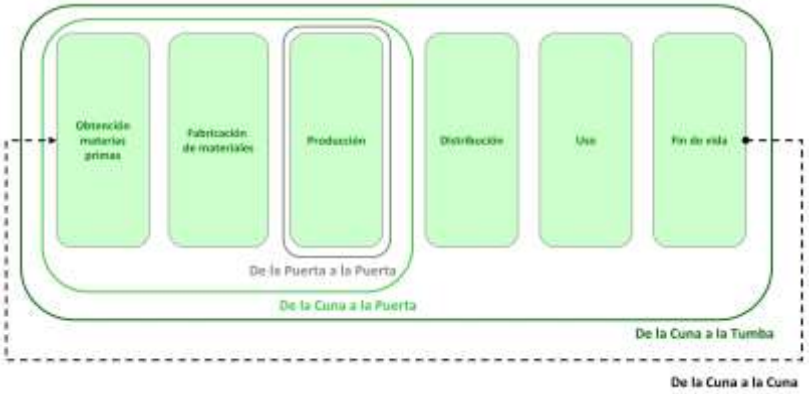


***Life Cycle Assessment Stages (LCA):***

- STAGE 2: INVENTORY ANALYSIS (LCI). At this stage the necessary data is collected for the environmental assessment of the product, process or activity upon the basis of this method. Data collection implies a great work, on the one side, knowledge of the materials and their origin, processes, consumed energy, transportation, etc.; and on the other side, the data quality and its availability. When data cannot be directly collected, it may be extracted from “external or internal data sets”.

- STAGE 3: LIFE CYCLE IMPACT ASSESSMENT. At this stage the inventory is translated into possible indicators of environmental impact related to the environment, human health and the disposal of natural resources. There are 3 stages: “Classification of impact categories” (Mandatory), “Characterization or “modelling” of inventory data” (Mandatory) and “Normalization, grouping and weighting” (Optional).

- STAGE 4: INTERPRETATION OF RESULTS. The results of the two previous stages “inventory assessment” and “impact assessment” are interpreted according to the objectives and scope defined at the beginning. Conclusions of the results assessment are registered, which allows to identify the LCA stages with the biggest environmental impact, and therefore may or must be improved. In case the aim of the study is to compare two products, the results may determine which one has a better environmental behaviour.

- STAGE 5: LIFE CYCLE COSTING ANALYSIS (LCC). The Life Cycle Costing (LCC) considers all costs, including the environmental impact during the entire life cycle, in the design and development stage of a product, process or activity. A product, process or activity costs during the entire life cycle are easily visible, e.g. direct costs of raw materials, energy and labour. Nevertheless, other costs are less visible as the productivity loss due to generated waste, emissions, etc.

Software for the implementation of LCA and Assessment of LCC

The Life Cycle Assessment (LCA) is complex because it involves great analysis work, carrying out large calculations and the use of data sets. Help is needed for that purpose, therefore, the use of software tools for LCA is very extended. Some software tools already include a module to carry out the assessment of the Life Cycle Costing (LCC).

Software tools facilitate the study of the Life Cycle Assessment (LCA), specially the following stages: inventory, impact assessment and interpretation of results. The most used software tools are: SimaPro and GaBi

## 13.5 Unit 5 PRINCIPLES/STRATEGIES OF ECODESIGN

Within the Eco-design, a series of strategies are highlighted whose main objective is to help to prevent, reduce and/or minimize the environmental impact of the product, associated to its Life-Cycle. These strategies highlight a number of considerations which should be applied during the development of a new product.

### 13.5.1 The Eight Strategies of Ecodesign

Each product is very different to the rest, from the concept, through its creation process and until reaching its end of use. This causes that each product presents different needs. Assessing the nature of the product is when the strategies to be applied should be selected.

It is important to taking into account that due to the close relationship between the different strategies and the stages of the Life-Cycle, when implementing the strategies, the impact of one stage must be considered and not transferred to another one.

The Lifecycle Design Strategies (LiDS) Wheel enables separate the implementation methodology in 4 differentiated levels:

- Conceptualization.
- Manufacture.
- Application.
- End of life.

Lifecycle Design Strategies (LiDS) Wheel

***The eight strategies of Ecodesign***

| Strategies | Sub-strategies |
|---|---|
| STRATEGY 0 NEW CONCEPT.<br><br>Optimise the function | - Dematerialisation: Reduction of material.<br>- Multifunctionality: enhancing functionalities as a product.<br>- Product sharing: maximising the use of products.<br>- Service rather than product (a service which replaces the use of a product). |
| STRATEGY 1 USE OF LOW IMPACT MATERIALS | Materials:<br>- From natural sources.<br>- Recyclable.<br>- Free of dangerous substances.<br>- Produced by ecological processes.<br>- Minimum possible number of different materials. |
| STRATEGY 2 REDUCTION OF MATERIALS | Reduction of materials used:<br>- Weight and volume.<br>- Use of folding, stacking systems, etc. |
| STRATEGY 3 OPTIMISATION OF PRODUCTION | - Alternative production techniques.<br>- Reduction of production stages.<br>- Minimisation of energy consumption.<br>- Reduction of waste.<br>- Cleaner consumables of production. |
| STRATEGY 4 OPTIMISATION OF DISTRIBUTION SYSTEM | Select environmentally efficient ways of distribution:<br>- Reduction of packaging materials used.<br>- Means of transport with low impact. |
| STRATEGY 5 REDUCTION IN ENVIRONMENTAL IMPACT OF USE | - Reduction of required maintenance<br>- Cleaner energy resources<br>- Reduce the use of disposable consumables<br>- Use of clean consumables |
| STRATEGY 6 OPTIMISATION OF LIFE TIME<br><br>Increased lifetime | - High reliability and durability<br>- Easier maintenance and repair<br>- Modular structure of a product<br>- Classical design<br>- Strong product-user bond |

| | |
|---|---|
| STRATEGY 7 OPTIMISATION OF END OF LIFE | - Recycling of the product<br>- Remanufacturing/modernise<br>- Recycling of materials |

## 13.6 Unit 6 ENVIRONMENTAL ASPECTS OF AN ORGANISATION

Every activity generates an impact on the environment. The extent of such an impact depends on the nature and amount of resources or energy consumed, and the waste, dumping and emissions resulted from those activities, i.e. the related environmental aspects.

**What are the environmental aspects and impacts?**

*Definitions of "Environmental Aspect and Impact", according to the Environemntal Management standard ISO 14001[8], are:*

- ENVIRONMENTAL ASPECT: element of an organisation's activities, products or services that can interact with the environment.
- ENVIRONMENTAL IMPACT: any change to the environment, whether adverse or beneficial, wholly or partially resulting from an organisation's environmental aspects.

Environmental aspects entail a cause-effect relationship. An environmental aspect leads to an environmental impact.

For an organization to be able to act on environmental impacts, they have to follow these steps:

1. IDENTIFY ENVIRONMENTAL ASPECTS.

   Environmental aspects of their own activity have to be previously identified and assessed. Each and every process and operation must be scrutinised, whether produced or potentially produced.

2. ASSESS ENVIRONMENTAL ASPECTS.

   The organisation has to define criteria which allow to establish a hierarchy according to their importance. The relevant aspect is labelled and classified as: "significant aspect".

3. PRIORITISE ENVIRONMENTAL ASPECTS.

   The prioritization of aspects of the organization will be based on the classification "significant environmental aspect". For this, several methods can be applied:

[8] UNE-EN ISO 14001:2015. Environmental Management Systems. Requirements with Guidance for Use.

"Significance matrix", "Percentage assessment", "State of regulation" and "Interest of the people concerned".

4. ESTABLISH OBJECTIVES, GOALS AND ENVIRONMENTAL PROGRAMMES.

In order to establish objectives, goals and environmental programmes, the organisation must:

1. Clarify if they will be applied only to some specific units or to the entire organisation.
2. Consider that they are in line with the environmental policy of the organization, the significant environmental aspects, the legal and regulatory requirements, and the opinions of interested parties.
3. Make an environmental strategy planning to achieve the goals and aims.

For that purpose, organisations may adopt or introduce Environmental Management Systems, according to a recognised standard, such as the ISO 14001[9] or the EMAS[10] Regulation, to identify and assess aspects and later take actions on their improvement in a planned manner.

## 13.7 Unit 7 IMPLEMENTATION OF ECODESIGN

The environmental factor must be integrated if the companies want to follow the evolution of market, the legislation and the customer's own demand. That is, develop ecodesign throughout the life cycle, but knowing that it is present in all stages of the life of the product, from the supply of materials to the final disposal of the product.

The manufacturer must be aware that not only has control over the stage of production, but also over all others.

This unit presents the methodology of the 7 stages with which to develop an Ecodesign project.

[9] UNE-EN ISO 14001:2015. Environmental Management Systems. Requirements with Guidance for Use.
[10] Regulation (EC) No 761/2001 of the European Parliament and of the Council of 19 March 2001 allowing voluntary participation by organisation in a Community eco-management and audit scheme (EMAS).

**7 stages to develop an Ecodesign Project.**

| STAGE | | Objective |
|---|---|---|
| 1 | **PROJECT PREPARATION** | Selection of work team: It will take into account, the organization and its size, the freedom to make decisions, a multidisciplinary team, the required departments and the need for external collaborations.<br>. Selecting a product: It must allow to be modified, clearly affected by the motivating factors and that is relatively simple (at least in the first projects).<br>Motivating factors (internal / external):<br>-External: Administration (legislation and regulation), market, competitiveness, social environment and others (sectoral associations, etc.).<br>-Internal: Product quality, image, costs and others (innovation, corporate social responsibility, staff motivation, etc.). |
| 2 | **ENVIRONMENTAL ASPECTS** | To identify and analyse the environmental aspects of the product throughout its LCA and establish in which of them you want to intervene in the design and product development project, there are several methods.<br>Tools:<br>MET Matrix. Qualitative method of inputs and outputs in each stage of the product Life Cycle.<br>Eco-Indicators. Simple quantitative tool. More accurate than the MET method. The prioritization is based on numerical calculations.<br>Life Cycle analysis software. LIFE CYCLE ASSESSMENT There are many, the most prominent: Eco-it; EcoScan; Simapro, Idemat and GaBi Software. |
| 3 | **IDEAS FOR IMPROVEMENT** | Once you know the main environmental aspects, the improvements ideas should be created. Throughout the process will come different ideas, which should be prioritised to work on the best. For this, there are some strategies.<br><br>Tools:<br>- Eight ecodesign strategies<br>- Brainstorming.<br>Matrix prioritization. |
| 4 | **CONCEPTS DEVELOPMENT** | Conditions and alternatives<br>Once the ideas of environmental improvement and are generated and the most important ones selected, the development stage begins, which will lead to the new product. The goal is to get solutions for the product that meet the solicitation documents. |
| 5 | **PRODUCT IN DETAIL** | This stage aims the detailed definition of the selected concept for a final design. The process will be iterative, evolving from a definition stage to the level of detail |
| 6 | **ACTION PLAN** | For pending measures. Integration of the strategy in the design and management. |
| 7 | **EVALUATION** | Evaluate the project to know in what way it has been fulfilled and improved. To achieve the conclusions of the project. Continual improvement.<br>The results of the evaluation will be very important to train, inform and motivate the rest of the staff, and to include green marketing in the marketing campaigns or strategies of the company, exercising a position of differentiation and leadership. |

## 13.8 Unit 8 ENVIRONMENTAL MANAGEMENT SYSTEM

An Environmental Management System (from now on EMS) is a system introduced to control all those processes of an organisation that are related to the environment and have an impact on it. The system helps managing the environment, by reducing, minimising and removing negative impacts result of the organisation's activities. The goal of such a system is:

*"To define and document methodologies to carry out activities under control, always from a more environmentally friendly perspective".*

***There are different Environmental Management Systems (EMS) according to its development degree: formal and informal***

**Formal SGMA**. Auditable by third parties and certifiable. Recognised standards are taken as reference, such as: worldwide **ISO 14001** or, at a European level, the **EMAS Regulation**, to develop, introduce and maintain the system. Both standards require it to be a systematic process and a continual improvement.

- **ISO 14001:2015**. Environmental Management Systems. Requirements with Guidance for Use.
- **Regulation (EC) No 1221/2009** of the European Parliament and the Council of 25 of November 2009 on the voluntary participation by organisations in a **Community eco-management and audit scheme (EMAS)**, repealing Regulation (EC) No 761/2001 and Commission Decisions 2001/681/EC and 2006/193/EC.
- **Commission Regulation (EU) 2017/1505 of 28 August 2017** amending Annexes I, II and III to Regulation (EC) No 1221/2009 of the European Parliament and of the Council on the voluntary participation by organisations in a **Community eco-management and audit scheme (EMAS)**.

**Informal or not referenced EMS.** Neither auditable, nor certifiable. Although they may prove effective, the organisation must be mature and experienced, so that the system is continuously and effectively under control.

### 13.8.1 Requirement of the Standard ISO 14001.

The first 4 sections are generic and this unit focuses solely on displaying the key points contained in sections 4 to 10.

The information gathered in subsection 0.4 "Plan-Do-Check-Act model" is worth mentioning as a basis for the approach to the continual application of the "Deming

Cycle" in an EMS for the continual improvement of individual systems and processes which are carried out meanwhile. Regarding this subsection, information is facilitated in a video file of this Unit 8 titled "Continuous Improvement in Management Systems".

| Specific sections of requirements of the ISO 14001:2015 | Requirements |
|---|---|
| **4. CONTEXT OF THE ORGANISATION** | Knowledge about the organisation and its "context" and identification of the "interested parties" in that context. |
| **5. LEADERSHIP** | Senior management plays an essential role for the success of the EMS introduction under this standard. Top management should demonstrate leadership and commitment to the system. |
| **6. PLANNING** | EMS must be planned by the organisation. Determine the "risks and opportunities" related to environmental aspects of the organisation and take proper actions. Identify and assess the organisation's "environmental aspects" from the life cycle perspective. Identify the significant aspects with the established criteria. Identify and assess the "legal environmental requirements" applicable to the activity, establishing a frequency for its review and update. Establish "improvement targets" to significant environmental aspects, legal requirements, as well as to risks and opportunities detected. |
| **7. SUPPORT** | Top management of the organisation must support the resources necessary for the EMS continual improvement. Training and competences. Communication. Control of documented information. |
| **8. OPERATION** | Establish operating criteria for the processes and their control, considering the environmental requirements of each their life stage.<br>Determine emergency situations, including those that may have an environmental impact, and establish methodologies to respond to these situations. |
| **9. PERFORMANCE EVALUATION** | The implemented EMS must be regularly reviewed: its effectiveness and compliance. Internal audits. Management review. |
| **10. IMPROVEMENT** | Continual improvement on processes efficiency and efficacy must be ensured. Define methodologies for the control of nonconformities and apply corrective actions. Continual improvement. |

Once the EMS is implemented, the organisation is in position to certify the system. The organisation will reach an accredited certification body (e.g. AENOR, BVQi, etc.) to proceed with a certification audit and to prove that the ISO 14001 requirements demanded are met.

If the outcome is satisfactory, the certification body will issue the corresponding ISO 14001 Certification.

### 13.8.2 Requirements of the EMAS Regulation

The objective of EMAS, as an important instrument of the Sustainable Consumption and Production and Sustainable Industrial Policy Action Plan, is to promote continuous improvements in the environmental performance of organisations with:

- The establishment and implementation of environmental management systems by organisations.
- The systematic, objective and periodic evaluation of the performance of such systems.
- The provision of information on environmental performance.
- An open dialogue with the public and other interested parties and the active involvement of employees in organisations and appropriate training.

There are some further requirements. Organisations have to:

- Conduct an environmental review (including the identification of all direct and indirect environmental aspects).
- Register by a competent body after successful verification of their organisation. Once registered, organisations are entitled to use the EMAS logo.

| *The general procedure for implementing EMAS in an organisation consists of the following 6 steps:* |
|---|
| 1. Initial environmental review |
| 2. Implementing an EMS in line with ISO 14001 |
| 3. System checking: internal audit and management review |
| 4. EMAS environmental statement |
| 5. EMS validation by an EMAS verifier |
| 6. Application for registration of EMAS |

Once registered, organisations are entitled to use the EMAS logo.

*The EMAS logo is a graphic image, associated with:*

- Commitment to continuous environmental improvement.
- Active involvement of employees.
- Credibility of information on the organisation's environmental performance.
- (Proven) legal compliance.

***Differences between ISO 14001 and EMAS:***

EMAS is more complete, since it not only demands compliance with Standard ISO 14001 requirements, but it also contains additional requirements:

- An environmental statement and an official record. The organisation is obliged to regularly facilitate the environmental information contained in that statement. This is an instrument for communication of the organisation's environmental behaviour.
- A public register of participating organisations in each country, which boosts business opportunities.

## 13.9 Unit 9 ECODESIGN IN THE ENVIRONMENTAL MANAGEMENT

AENOR suggested the development of an international standard for Ecodesign Management to the International Organization for Standardization (ISO) motivated by the increasing demand of companies to certify ecodesign. In 2008 the workgroup "ISO/TC 207/SC 1/WG 4" was formed to achieve that purpose, headed by the BSI (British Standards Institution) and with AENOR at the secretariat of the group. The Spanish UNE 150301 was regarded as a reference for the development of the standard ISO. Finally, in 2011 the standard ISO 14006 was approved and published.

- ISO 14006:2011. Environmental Management Systems. Guidelines for Incorporating Ecodesign.

In short, the essential objectives of the standard ISO 14006, assisting tool for the Environmental Management of Design, are:

***Summary of Objectives of the international ISO standard 14006:***

- Establishing a systematic methodology to guarantee the continual environmental improvement in the design process and the development of products/services.
- An approach based on the all stages of the life cycle of the product/service, environmental aspects and impacts related to each one of them.
- Facilitate communication for companies to show their environmental performance through an issued certificate accrediting the compliance of the requirements demanded.
- Raise awareness in the market and society on the environmental impact that products/services generate.

The clauses that offer guidance to the manager of the environmental management system are: 4, 5 y 6, and will be further addressed in the following section, 9.2.2 Key Requirements of ISO 14006.

| Specific sections of requirements of the standard ISO 14006:2011 | Requirements |
|---|---|
| **4. ROLE OF TOP MANAGEMENT IN ECODESIGN** | In this clause, the potential benefits of ecodesign are explained and the strategic issues for the business and management are considered.<br>Top management comprises two kind of tasks to secure that ecodesign is implemented in the organisation: to consider the "strategic aspects of ecodesign" and "management of internal processes", once the ecodesign strategy and approach are established. |
| **5. GUIDELINES FOR INCORPORATING ECODESIGN INTO AN EMS** | This clause requires the treatment of ecodesign as an integral part of an Environmental Management System (EMS) according to the requirements of the standard ISO 14001. The designed process and product development are required to be included in the EMS scope.<br>Define the "Environmental Policy". Identify the environmental aspects and its assessment. Identify the legal and other requirements and ist assessment. Define objectives, targets and programmes.<br>implementation and operation:<br>- Resources, roles, responsibility and authority.<br>- Competence, training and awareness.<br>- Communication internal and external to all interested parties.<br>- Documentation and its control.<br>- Operational control. Implementation of the methodology to incorporate ecodesign in the stages of design and development. Design and development "planning", "inputs", "outputs", "review", "verification", "validation" and "control of design and changes". |

| | |
|---|---|
| **6. ECODESIGN ACTIVITIES IN PRODUCT DESIGN AND DEVELOPMENT** | This clause addresses ecodesign considered in product design and development.<br>- THINKING. Life Cycle thinking: Objective to minimise the environmental impact of the product; identifying, assessing the significant environmental aspects of the product, and considering the trade-offs between environmental aspects and between different life cycle stages.<br>- ECODESIGN PROCESS: Definitions of products and its environmental parameters. Identify strategies for environmental improvement. Development of environmental objectives and targets based on those strategies.<br>- ENVIRONMENTAL ASSESSMENT OF PRODUCTS: The choice depends on the organisation's strategy, type of product, expertise, time and budget.<br>- ANALYSIS OF INTERESTED PARTIES' ENVIRONMENTAL REQUIREMENTS: As an initial step they help set the basic framework within a product is developed.<br>- ECODESIGN REVIEW: Environmental considerations must be integrated within.<br>- VALUE CHAIN INVOLVEMENT: Organisations in the value chain should cooperate and communicate information on their product or product category to achieve ecodesign objectives. |

Once the EMS has been implemented, the organisation is in position to certify the system.

The organisation will reach an accredited certification body (e.g. AENOR, BVQi, etc.) to proceed with a certification audit and to prove that the ISO 14006 requirements demanded are met.

If the outcome is satisfactory, the certification body will issue the corresponding ISO 14006 Certification.

## 13.10 Unit 10 INTRODUCTION TO ECOLABELLING. COMMUNICATION

### 13.10.1 Types of Ecolabel

Ecolabels appear to give an answer to the need of organisations for a system that allows them to advertise environmental qualities of their products. In doing so, organisations may identify their products for the consumers and compare them with their competitors.

In order to solve this communicative problem between organisations and the market in terms of environmentally sustainable consumption, three kinds of mechanisms regulated by international standards were officially created and defined. The International Organization for Standardization (ISO) classifies labels into three types: I, II, and III.

***TYPES OF ECOLOGICAL LABELS ACCORDING TO ISO:***

- Type I Ecolabel – Ecolabels (ISO 14024).
- Type II Ecolabel - Self-declared environmental claims (ISO 14021).
- Type III Ecolabel - Environmental Product Declarations (ISO 14025).

Another type of well-known and widely used ecolabels are those catalogued as “semi-type I”. They follow regulations which are not in line with the ISO 14020 group of standards. These standards affect to one or more characteristics or aspects of a product, but not to the entire product.

## Summary of characteristics of type I, II, III and Semi Type I Ecolabel:

| TYPE | CHARACTERISTICS | EXAMPLES |
|---|---|---|
| **TYPE I** | ▪ A voluntary, multicriteria programme developed by a third party.<br>▪ It indicates that a product is more environmentally suitable according to considerations based on its life cycle.<br>▪ Environmental criteria established by product categories. Criteria must set achievable limits, considering the relative environmental impacts, and also the capability for measurement and accuracy.<br>▪ Compliance with environmental legislation.<br>▪ The aptitude for use must be considered.<br>▪ Environmental criteria and functional requirements must be reviewed in a periodic and defined way.<br>▪ Transparency through all stages of their development and operation involving all interested parties. | |
| **SEMI-TYPE I** | ▪ They do not follow the scheme of the 14020 family of norms.<br>▪ Sectoral or manufacturer associations, social associations, etc., defined environmental criteria on certain priority aspects, with limits for compliance and accrediting the same through a label.<br>▪ They are integrated into groups such as: Agriculture and food, Energy consumption, Building materials and sustainable building, Textile products and Use of wood. | |
| **TYPE II** | ▪ Voluntary self-declaration by the organisation.<br>▪ Non-mandatory verification or certification by independent third party. The declarant has full responsibility for his declaration.<br>▪ Usually one criterion.<br>▪ 18 general guidelines for environmental messages.<br>▪ No testing methodology.<br>▪ They are statements, symbols or charts that describe specific environmental characteristics of the product.<br>▪ They must be accurate and neither misleading, nor cause misunderstandings | |

| | | |
|---|---|---|
| **TYPE III** | ▪ Voluntary Environmental Declaration.<br>▪ Mandatory verification by third party.<br>▪ They provide quantified information of the life cycle (according to ISO 14040), and comparable with other products that perform the same function.<br>▪ Inform about the environmental impact of a product throughout its life cycle. There are some environmental indicators defined by product category. They are classified by impact category.<br>▪ Unlike type I labels, type III neither define the environmental preference of products nor establish minimum requirements to meet. | |

### 13.10.2 Difference between Ecolabels and Product Ecodesign

| ECOLABEL | ECODESIGN |
|---|---|
| Certification associated with a product | Certification associated to the management system (design process) |
| Evidence that a product meets pre-established environmental criteria and ensures, with that label, that every product from different manufacturers have the same characteristics. | It allows the organisation to choose freely, among the properties of their product or service, where the environmental improvement is carried out through design. |
| Ensures compliance with certain requirements set in technical specifications (standards) that do not vary over time. | It is based on continuous improvement. That is, the systematic introduction of successive improvements or new product designs is ensured and, therefore, the evolution of the same in terms of sustainability. |
| A product image improvement. | An improvement of the product image and the system management of the organisation. |

## 13.11 Unit 11 ENVIRONMENTAL PRODUCT DECLARATION COMMUNICATION.

### 13.11.1 What is an Environmental Product Declaration?

An Environmental Product Declaration (EPD) is a standardised document or report which provides quantified and verifiable data on the environmental performance of a product, material or service.

An EPD is regulated with the standard ISO 14025[11], according to which a Type III environmental declaration is: “An environmental declaration providing quantified environmental data using parameters and, where relevant, additional environmental information”. Defining “environmental declaration” as the expression of a product or service aspects.

[11] ISO 14025:2006. Environmental Labels and Declarations. Type III Environmental Declarations. Principles and Procedures.

*The main difference between a Type III EPD Eco-label and the rest of Type I Eco-labels and Type II Green Claims is that an EPD defines neither environmental requirements nor minimums to meet, but displays the results of a LCA to provide data on the environmental behaviour of a product.*

An EPD must be carried out according to standard ISO 14025[12]and the required LCA according to standards ISO 14040[13] and ISO 14044[14]. The EPD must be verified by an independent third party to the LCA study. The term "third party" does not necessarily imply the involvement of a certification body.

### 13.11.2 Development and Verification of an EPD

For the development of an EPD, certain stages must be followed according to the specified standards described in the 11.1 paragraph:

- For the LCA: ISO 14040 and 14044 and what is described in the standard ISO 14025 for the development of an EPD.
- Additionally, specific requirements established in the referenced PCR for this group of products will be applied.

The steps for the development and verification of an EPD are displayed in the following table:

| Stage | Description |
|---|---|
| 1 | **VERIFICATION OF EXISTENCE OF A REFERENCE PCR**<br>PCR (Product Category Rules) are documents which gather minimum necessary data to include in the LCA study, the impact methodology in use and the EPD content. |
| 2 | **DEVELOPMENT OF THE LCA**<br>A brief summary of the stages of a LCA<br>1. GOAL AND SCOPE DEFINITION: Definition of objectives, scope, system boundaries and functional unit of the LCA study.<br>2. INVENTORY ANALYSIS: Elaboration of the inventory of the system's life cycle.<br>3. ENVIRONMENTAL IMPACT ASSESSMENT: The inventory is translated into indicators of environmental impact.<br>4. INTERPRETATION: Interpretation of results and Drafting of the LCA report. |
| 3 | **DRAFTING OF THE EPD** |

[12] ISO 14025:2006. Environmental Labels and Declarations. Type III Environmental Declarations. Principles and Procedures.
[13] ISO 14040:2006. Environmental Management. Life Cycle Assessment. Principles and Framework.
[14] ISO 14044:2006. Environmental Management. Life Cycle Assessment. Requirements and Guidelines.

| | |
|---|---|
| | According to standard ISO 14025 , a type III environmental declaration of a product category must be carried out under a specific format and include a series of parameters as it is showed in the Product Category Rules (PCR) provided by the programme manager. |
| **4** | **VERIFICATION AUDIT OF THE EPD**<br>The verification must be carried out by an independent and recognised third party.<br><br>Previous to the verification audit by a third party, the organisation must issue a report summarising the declared product. This will provide the verifier with systematic and thorough data on the fulfilment of the "LCA study documents" and the "additional data".<br><br>Verification consists generally of two steps: Documental review and Verification audit. |

## 13.11.3 Product Category Rules (PCR)

Some EPD verification programmes specify, for different groups of products, the most detailed way to carry out a LCA and an EPD, granting the use of a symbol added to the report, which works as an environmental certificate.

PCR gather minimum necessary data to include in the LCA study, the impact methodology in use and the EPD content. PCR gather minimum necessary data to include in the LCA study, the impact methodology in use and the EPD content.

PCR are developed by bodies to set common rules in the market for the elaboration and drafting of EPD.

Every verification programme provides its own PCRs. This kind of systems are suitable for data exchange between companies and their clients, not for the standard final consumer, since the information borne in the EPD, in its own nature, is very technique and detailed.

A PCR document is valid for a specific period of time, usually five years.

The most known bodies: The international EPD Consortium, "The Japan Environmental Management Association for Industry-JEMAI", "Korean Ecoproducts institute KOEKO» and the «Korean Ministry of Environment", "Norwegian EPD Foundation", "Institute Construction and Environment (IBU), "Colegi d'aparelladors, arquitectes técnics i enginyers d'edificació de Barcelona" and Asociación francesa P.E.P.